Technology Opportunity
Glenn Research Center • Cleveland • Ohio
Technology Transfer & Partnership Office

TOP3–00164

Radio Frequency/Microwave Frequency (RF/MF) Probe

Technology

A radio frequency/microwave frequency (RF/MF) probe station that allows testing up to 540 °C.

Benefits

- This technology enables quick, low-cost testing of high-temperature RF/MF devices at their operating temperature, which improves reliability of the devices.
- This technology improves the durability of RF/MF probes used at elevated temperatures.

Commercial Applications

This technology will be used to test electronic devices that operate in high-temperature environments such as

- Internal components of aerospace engines
- Internal components of automotive engines
- Deep-hole wells

Technology Description

Emerging markets for high- temperature electronics have created a need to test electronic devices at high temperatures. NASA has developed a technology that enables probe testing of high-temperature electronic devices at their operating temperature, which is important because the properties of RF/MF devices often change drastically with temperature.

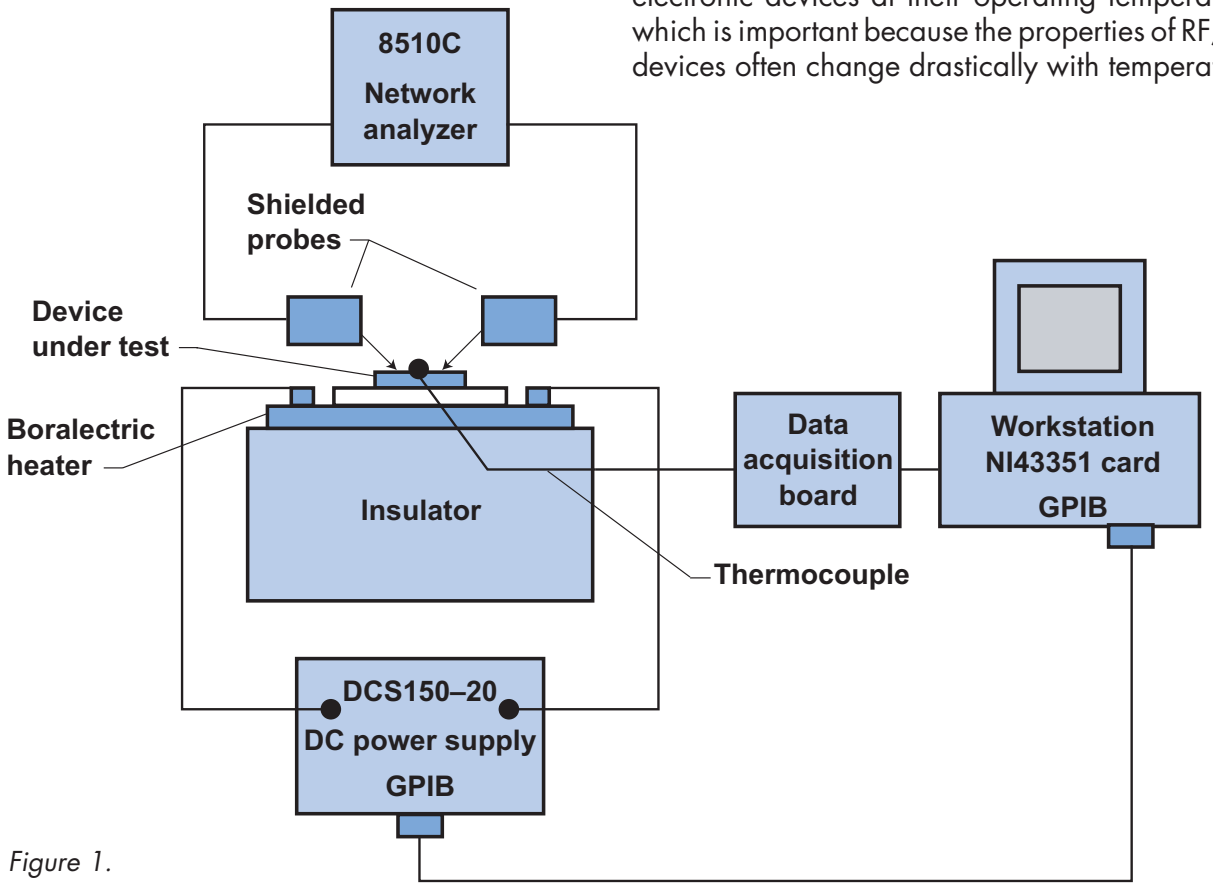

Figure 1.

The subject technology uses off-the-shelf wafer probes that can operate up to 230 °C. NASA's technology enhances these probes by selectively heat shielding and insulating the probe, cables, and microscope that constitute a probe station. Figure 1 is a block diagram of a probe station incorporating NASA's technology, showing the heater insulator and shielded probes. Figure 2 depicts a probe head, showing the measured temperature drop across the heat shielding and insulation. Even when the probe is brought within a centimeter of the 500 °C heater, the probe only sees a temperature of 160 °C, which is well below its operating temperature of 230 °C.

A probe station specifically modified for high-temperature use will allow devices to be measured quickly and flexibly, without the use of wirebonds and test fixtures. Prior to NASA's technology, the only way to test devices at high temperature was to dice the wafer, mount the die onto a fixture, and then wirebond each electrical connection. That process is time consuming and expensive. Using a probe allows a die to be tested on the wafer, so defective dies can be disregarded without investing in dicing and other processing. NASA's technology extends the operating range of commercially available probes up to at least 540 °C. Also, testing at elevated temperatures, around 200 °C, has shown that NASA's technology reduces probe degradation, which extends their life.

Options for Commercialization

There is a patent application in process for this technology. NASA is seeking companies interested in applying this technology to commercial applications.

Contact

Technology Transfer & Partnership Office
NASA John H. Glenn Research Center
at Lewis Field
Mail Stop 4–2
Cleveland, OH 44135–3191
Phone: 216–433–3484
Fax: 216–433–5012
E-mail: ttp@grc.nasa.gov
http://technology.grc.nasa.gov

References

LEW–17499–1

Key Words

Radiofrequency probe

Microwave frequency probe

High-temperature probe

High-temperature elements

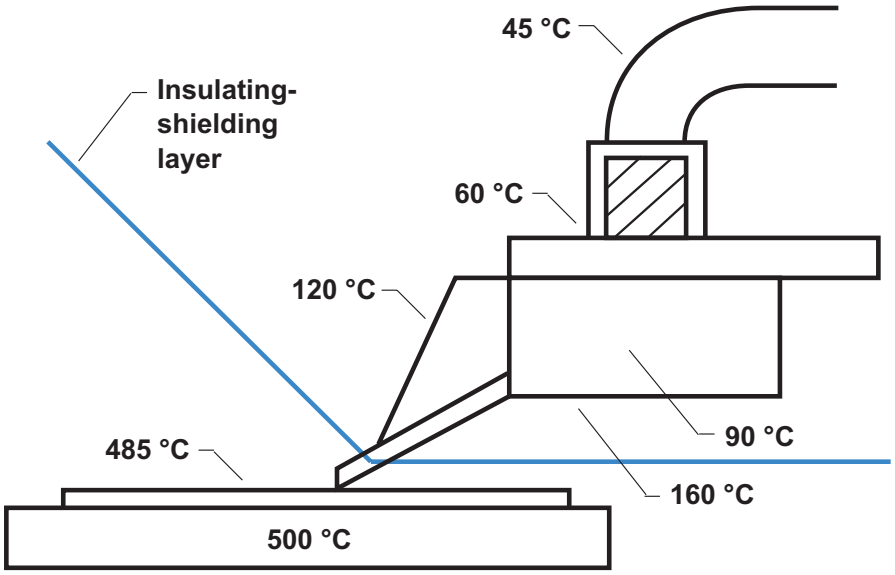

Figure 2.