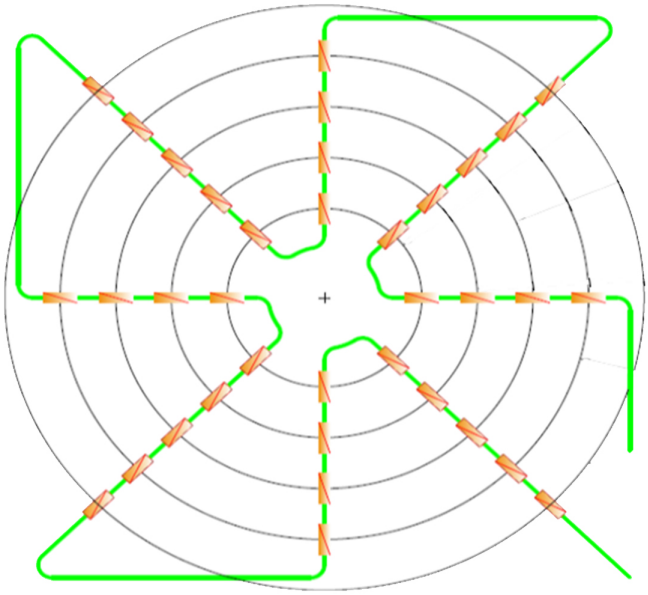

Image credit: NASA

National Aeronautics and Space Administration

TECHNOLOGY SOLUTION

Sensors

MMOD Impact Detection and Location

Micrometeoroid/Orbital debris impact detection and location using fiber optic strain sensing

Determination of micrometeoroid/orbital debris (MMOD) impact on orbiting spacecraft currently requires visual inspection. For human-rated spacecraft such as the ISS and, previously, the Space Shuttle Orbiter, this has required crew time as well as vehicle assets to identify damage due to MMOD strikes. For unmanned spacecraft, there are no human assets present to conduct detailed surveys to ascertain potential damage. NASAs Langley Research Center has developed a strain-sensing system that can be affixed to a spacecrafts micrometeoroid/orbital debris (MMOD) shielding layer or structure. This technology detects the occurrence, time, location and severity of a MMOD strike on the shield, allowing for detection and location of potentially harmful MMOD strikes on both crewed and unmanned spacecraft. This knowledge is important because prolonged exposure to the on-orbit MMOD environment increases risk to vehicles in this environment including commercial crew vehicles expected to visit and remain for considerable periods of time at ISS.

BENEFITS

- Fiber Bragg Grating sensors provide an efficient and easily implemented means of instrumenting MMOD shields and spacecraft structure
- Can be manufactured from COTS or near-COTS components
- This technology is apparently novel for spacecraft applications and could become one element in a suite of systems to monitor/assure a return-ready condition for manned spacecraft

THE TECHNOLOGY

Multiple strain sensors encoded into one or more optical fibers are affixed to a MMOD shield or structure. The optical fiber(s) is/are connected to a data collection device that records strain data at a frequency sufficient to resolve MMOD impact events. Strain data are processed and presented on a computer display. MMOD impact imparts a transient shock loading to a structure which is manifested as transient strain as the shock wave moves through the structure. MMOD impacts are determined from the time signature of, both, measured strain from multiple sensors on the optical fiber(s) as well as strain resulting from plastic strain induced in the MMOD shield and structure as a consequence of the MMOD impact (for materials exhibiting plastic strain). The array of strain sensors, encoded into one or more optical fibers using Fiber Bragg Grating (FBG) technology, records time varying strain to identify that a strike has occurred and at what time it occurred. Strike location information can be inferred from the residual plastic strain recorded by the multitude of strain sensors in the fiber(s). One or more optical fibers may be used to provide optimal coverage of the area of interest and/or to ensure a sufficient number of strain measurements are provided to accurately characterize the nature of the impact.

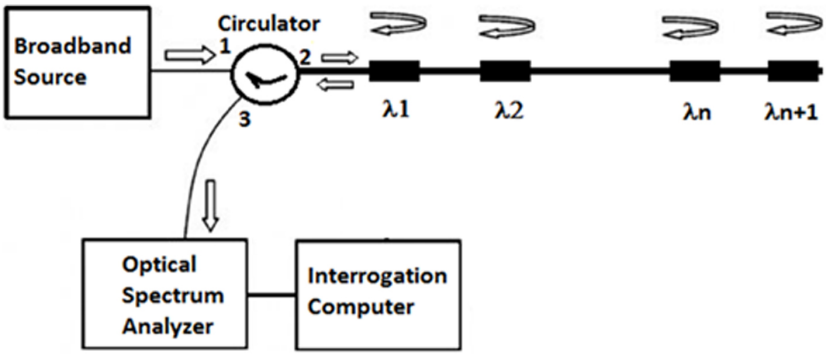

Fiber Optic Strain System Block Diagram. Image credit: NASA

APPLICATIONS

The technology has several potential applications:

- Of possible interest to all aerospace companies engaged in spacecraft work, such as commercial crew providers and developers of elements of the Deep Space Gateway and transport system
- Complex unmanned vehicles such as satellites and UAVs may also benefit from automated object impact detection

PUBLICATIONS

Patent No: 10,267,694

Rickman, S. L., Richards, W. L., Christiansen, E. L., Piazza, A., Pena, F., Parker, A., R., Micrometeoroid/Orbital Debris (MMOD) Impact Detection and Location Using Fiber Optic Bragg Grating Sensing Technology, 6th Asia Pacific Workshop on Structural Health Monitoring, December, 2016.

technology.nasa.gov

NASA's Technology Transfer Program pursues the widest possible applications of agency technology to benefit US citizens. Through partnerships and licensing agreements with industry, the program ensures that NASA's investments in pioneering research find secondary uses that benefit the economy, create jobs, and improve quality of life.

LAR-18723-1, LAR-TOPS-245

More Information

National Aeronautics and Space Administration

Agency Licensing Concierge

Langley Research Center

Mail Stop 020
Hampton, VA 23681
202-358-7432
Agency-Patent-Licensing@mail.nasa.gov

www.nasa.gov

NP-2017-03-2379-HQ