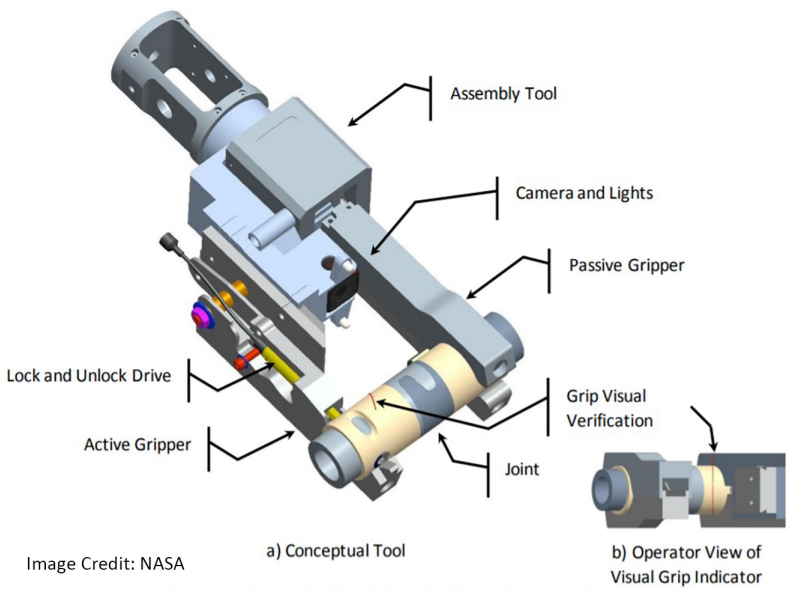


Figure 5. Conceptual Installation Tool Operating on Joint

National Aeronautics and Space Administration

TECHNOLOGY SOLUTION

## Mechanical and Fluid Systems

# Square Structural Joint with Robotic Assembly Tool

Square trusses replace round for enhanced strength and robotics compatibility

The square structural joint design enables robotic assembly and has been designed for high strength to weight, multifunctionality, and reduced manufacturing cost. They not only provide increased axial stiffness compared to round tubes of the same width, but torsional and bending strength is increased as well. Electrical conductivity and provisions for routing of wiring or tubing through the joints have been incorporated in the design as well, all enabling greater capability and a stronger structural design.

### BENEFITS

- Improves packaging efficiency
- Improves structural efficiency in a constrained package
- Rotational registration
- High torsional/torque capability (about x axis)
- High bending capability about all axes
- High axial capability due to increased contact surface area
- Cost effective manufacturing
- Nearly complete perimeter contact geometry for improved structural efficiency
- Improved cantilever beam response via linear torsional response about x-axis and linear bending response about y- and z-axis
- Linear axial response along x-axis
- Internal stop plate can be customized to make unlock stable or unstable
- Low electrical resistance across locked joint
- Integral electrical connectors and pathways
- Robotically compatible tool drive
- Mechanical and visual indicators to verify locking operation
- Tunable preload and capture spring forces

## THE TECHNOLOGY

The square form joint has several novel features to improve reliability, performance and robustness. Most simply, the square tubes are stronger than round for a specified maximum cross-section dimension.

Structural benefits include nearly complete perimeter contact geometry for improved structural efficiency, improved cantilever beam response via linear bending response about y and z axis, and linear torsional response about x axis. Additionally, there is betterlinear axial response along x axis due to simple geometry and large contact surfaces, higher torsional/torque capability (about x axis), higher bending capability about all axes, higher axial capability, and is more cost effective to manufacture. It also offers a bonding strap and treated contact surfaces that provide electrical conductivity through the joint.

Switching to square cross section joints provides packaging efficiency, along with numerous improvements for robotic assembly applications such as providing rotational registration, robotically compatible tool designs, both mechanical and visual indicators to verify locking operation, preload and capture spring forces with a unique stop plate in the drive train that can be designed to default to the assembled condition without a preload, yet spring back if forced toward unlocked. After assembly, preload can be adjusted for security. Designed for robust assembly, the robotic tools are built to actuate the joint.

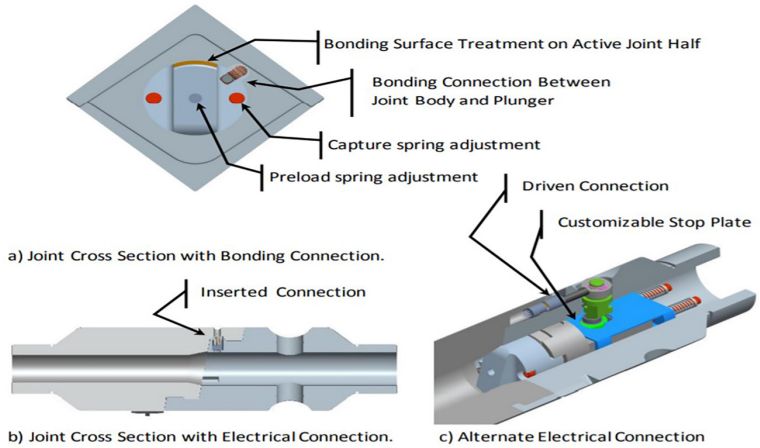


Square Cross Section Erectable Joint. Image Credit: NASA

## APPLICATIONS

The technology has several potential applications:

- Portable aerospace structures suitable for on orbit / in space assembly
- Portable terrestrial structures, including clean rooms, field hospitals, decontamination rooms

## PUBLICATIONS

Patent Pending

**technology.nasa.gov**

NASA's Technology Transfer Program pursues the widest possible applications of agency technology to benefit US citizens. Through partnerships and licensing agreements with industry, the program ensures that NASA's investments in pioneering research find secondary uses that benefit the economy, create jobs, and improve quality of life.

LAR-18923-1, LAR-TOPS-316

## More Information


National Aeronautics and Space Administration

**Agency Licensing Concierge**

**Langley Research Center**

Mail Stop 020
Hampton, VA 23681
202-358-7432
Agency-Patent-Licensing@mail.nasa.gov

**www.nasa.gov**



NP-2019-04-2690-HQ