National Aeronautics and Space Administration

TECHNOLOGY SOLUTION

Power Generation and Storage

Thermal Management for Aircraft Propulsion Systems

Novel thermoacoustic engine uses waste heat to cool and power components

Innovators at NASA's Glenn Research Center have developed a lightweight, reliable thermal management system, for both ambient and cryogenic propulsion systems, that increases overall fuel efficiency from 40 to 60 percent. Conventional aircraft propulsion systems struggle to keep high-powered electric motors and electronics cool without resorting to extra mass and complexity that negate the benefits of electric propulsion in aircraft. Glenn's thermal management system uses the normally wasted energy from turbofan propulsion to cool electronics and power equipment. The waste heat produces a high-intensity acoustic wave, created from the temperature gradient between the hot and cold heat exchangers. This acoustic wave energy propagates through thermoacoustic power tubes, where it can be used for component cooling or converted to electric power via a linear alternator. Glenn's system can provide highly efficient electric power to aircraft components while cooling the aircraft's propulsion system without added mass and complexity.

BENEFITS

- Compact: Lightweight design is easily integrated into aircraft
- Efficient: Overall system efficiency increases from 40% to 60%
- Safe: The system does not require cryogenic cooling fuels, which are highly flammable and explosive
- Reliable: This technology has no hot moving parts, plumbing, or wiring and is therefore virtually maintenance-free
- Low cost: The system achieves significant savings in fuel, material, and maintenance costs

THE TECHNOLOGY

Aircraft thermal management systems typically comprise over half the mass associated with full electric power propulsion systems, with significant negative impact on fuel efficiency. In addition, the traditional method of using jet fuel to cool aircraft generators does not provide enough cooling for use in flight-weight cryogenic systems. Lastly, the much higher bus voltages required for flight-weight systems (4.5 kV vs. 270 V) introduce additional spark-ignition hazards associated with alternative cryogenic cooling fuels, including liquid methane or liquid hydrogen. The Glenn flight-weight thermal management system addresses all of these problems by using the considerable waste heat energy from turbogenerators to create a pressure wave thermoacoustically. This wave can then be delivered quietly and efficiently via routed ductwork to hollow pulse-tube coolers located near any component in the aircraft that requires cooling. The tubes can be fabricated in any length and can be curved to fit any space. This technology also allows waste heat energy to be used in at least four ways: 1) the waste heat energy can drive a thermoacoustics-based ambient or cryogenic heat pump; 2) it can be channeled directly into a thermoacoustic engine that generates power; 3) it can convectively preheat the fuel/ or air supplied to the aircraft engine; 4) it can drive a pulse-tube generator providing power. The delivered thermoacoustic power can provide cabin cooling as well as ambient/cryogenic cooling of converter, cables, and motors. In addition, this power can be converted to local electric power through the use of a transducer (such as a linear alternator) or piezoelectrics. Further, the efficient thermal management system enables the size, mass, and resultant cost of the radiating fins to be reduced. Glenn's system offers an efficient method of cooling next-generation flight-weight electric aircraft with significant benefits for fuel efficiency and safety.

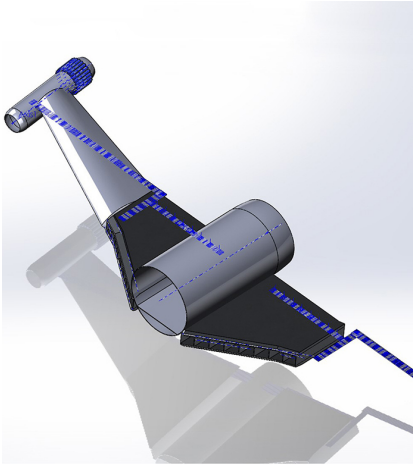

Glenn's thermal management system uses thermoacoustics to direct waste heat from engines, increasing an aircraft's efficiency and reliability

This system will enable any aircraft, from the N3-X craft pictured to conventional 737s, to boost fuel efficiency and deliver power to crucial components

APPLICATIONS

The technology has several potential applications:

- Aerospace (e.g., electric aircraft, aircraft auxiliary power units, aircraft thermal management)
- Unmanned vehicles
- Satellites

PUBLICATIONS

Patent No: 10,507,934; 11,371,431

technology.nasa.gov

NASA's Technology Transfer Program pursues the widest possible applications of agency technology to benefit US citizens. Through partnerships and licensing agreements with industry, the program ensures that NASA's investments in pioneering research find secondary uses that benefit the economy, create jobs, and improve quality of life.

LEW-19353-1, LEW-19353-2, LEW-TOPS-110

More Information

National Aeronautics and Space Administration

Agency Licensing Concierge

Glenn Research Center

21000 Brookpark Road
Cleveland, OH 44135
202-358-7432
Agency-Patent-Licensing@mail.nasa.gov

www.nasa.gov

NP-2016--6-2188-HQ