National Aeronautics and
Space Administration

Mechanical and Fluid Systems

Floating Piston Valve

A Novel Approach to Low Maintenance Actuator-less Valves

The valve developed consists of a solid piston floating in a medium to control the flow stream. The piston is designed to be axially and radially balanced within the flow stream whether the valve is in the open or closed position. The only force imparted onto the piston is that which the operator chooses to input on to it. The advantages to this design are (1) the elimination of a conventional actuator, which is replaced by one or two simple solenoid valves; (2) elimination of valve actuator adjustments; (3) consistent seating force regardless of the pressure drop across the valve; (4) elimination of the valve stem and stem seals; and (5) elimination of most flow induced thrust forces. Additionally, the valve consists of only five parts with a few simple seals incorporated into a well protected design. The simple design allows for use in nominal or extremely high pressures and for the use of soft or hard metal seats; this valve design reduces downtime and maintenance costs, while increasing valve reliability and seat life.

BENEFITS

- Reduced maintenance due to single design with fewer parts and seals
- Reduced size
- Reduced cost
- No fugitive emissions
- Hermetically sealed and leak-free
- Withstand high pressure

APPLICATIONS

- Power plants
- Petrochemical plants
- Chemical industry
- Refineries
- Pressurized storage tanks
- Cryogenic fluid systems
- Pharmaceutical manufacturing industry
- Severe duty, extremely high pressure or temperature
- Fast actuation applications

technology solution

THE TECHNOLOGY

Instead of looking to improve current valve designs, a new type of valve was conceived that not only addresses recurring failures but could operate at very high pressures and flow rates, while maintaining high reliability and longevity. The valve design is applicable for pressures ranging from 15-15,000+ psi, and incorporates a floating piston design, used for controlling a flow of a pressurized working fluid.

The balanced, floating piston valve design has a wide range of potential applications in all sizes and pressure ranges. The extremely simple design and few parts makes the design inherently reliable, simple to manufacture, and easy to maintain. The valve concept works with soft or hard metal seats, and the closing force is easily adjustable so that any closing force desired can be created. The fact that no adjustment is required in the design, ensures valve performance throughout valve life and operation.

This valve has many unique features and design advantages over conventional valve concepts:
- The largest advantage is the elimination of the valve stem and any conventional actuator, reduces physical size and cost.
- It is constructed with only 5 parts.
- It eliminates the need for many seals, which reduces failure, downtime and maintenance while increasing reliability and seat life.
- The flow path is always axially and radially symmetric, eliminating almost all of the flow induced thrust loads - even during transition from closed to open.

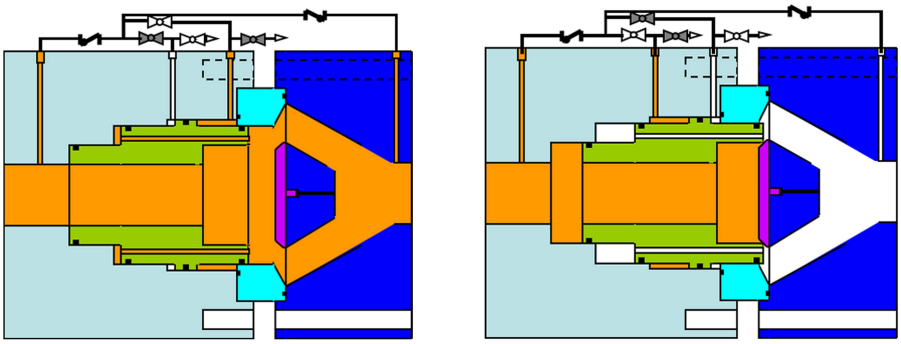

The valve in the open position (left) allows fluids and gases to flow. In the closed position (right) the valve is hermetically sealed.

4 inch floating piston valve assembled

PUBLICATIONS

Patent No: 8,336,849

Farner, Bruce. "Conical Floating Piston Valve." TechConnect World Innovation Conference & Expo, June 16, 2015, Washington, DC.

More Information

National Aeronautics and Space Administration

Duane Armstrong

Stennis Space Center

EA42/Advanced Technology and Technology Transfer Branch
Stennis Space Center, MS 39529
228-688-1929
ssc-technology@nasa.gov

http://technology.nasa.gov/

www.nasa.gov

NP-2014-08-1150-HQ

NASA's Technology Transfer Program pursues the widest possible applications of agency technology to benefit US citizens. Through partnerships and licensing agreements with industry, the program ensures that NASA's investments in pioneering research find secondary uses that benefit the economy, create jobs, and improve quality of life.

SSC-00264