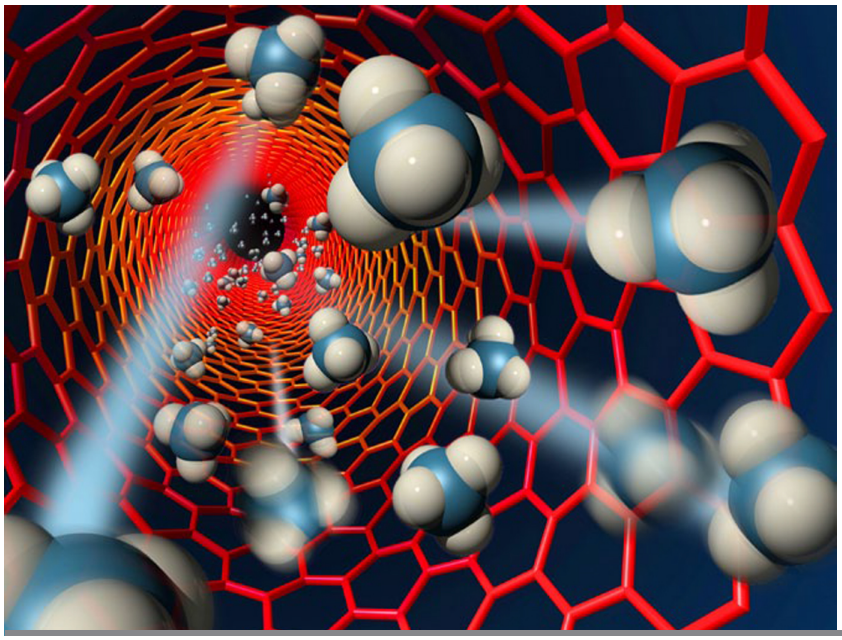

National Aeronautics and Space Administration

TECHNOLOGY SOLUTION

Sensors

Gas Composition Sensing Using Carbon Nanotube Arrays

Simultaneous detection of multiple gas components in a sample gas

Few sensors are available to detect inert gases. Conventional inert gas analysis tools primarily rely upon infrared (IR) spectroscopy, mass spectroscopy (MS) and/or thermal conductivity measurements. Thermal conductivity sensors are available for fixed and portable instruments, but this technique is not suitable for measuring extremely low concentration levels of a gas. NASA Ames has patented a novel technology that is relatively lightweight, small size sensor, consumes a relatively small amount of power for detection of inert gases. The technology is a use of a vertical alighted multi-walled carbon nanotube (MWCNT) based discharge gas sensor array for highly sensitive and selective electrical detection of inert gases, such as argon, oxygen, nitrogen, carbon dioxide, etc. at room temperature. The sensing approach is based on generating an electrical discharge current and measuring the specific gas breakdown voltage associated with each gas present in a sample.

BENEFITS

- Offers high sensitivity, high selectivity and fast response tool for inert gas detection
- Lightweight
- Consumes a relatively small amount of power for in-situ chemical measurement

THE TECHNOLOGY

An array of carbon nanotubes (CNTs) in a substrate is connected to a variable-pulse voltage source. The CNT tips are spaced appropriately from the second electrode maintained at a constant voltage. A sequence of voltage pulses is applied and a pulse discharge breakdown threshold voltage is estimated for one or more gas components, from an analysis of the current-voltage characteristics. Each estimated pulse discharge breakdown threshold voltage is compared with known threshold voltages for candidate gas components to estimate whether at least one candidate gas component is present in the gas. The procedure can be repeated at higher pulse voltages to estimate a pulse discharge breakdown threshold voltage for a second component present in the gas.

The CNTs in the gas sensor have a sharp (low radius of curvature) tip; they are preferably multiwall carbon nanotubes (MWCNTs) or carbon nanofibers (CNFs), to generate high-strength electrical fields adjacent to the current collecting plate, such as a gold plated silicon wafer or a stainless steel plate for breakdown of the gas components with lower voltage application and generation of high current. The sensor system can provide a high-sensitivity, low-power-consumption tool that is very specific for identification of one or more gas components. The sensors can be multiplexed to measure current from multiple CNT arrays for simultaneous detection of several gas components.

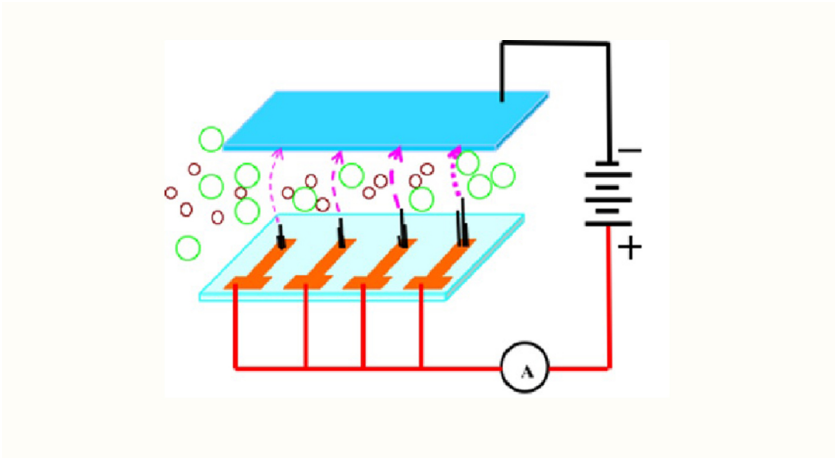

Sketch of the working principle of a discharge gas sensor array

APPLICATIONS

The technology has several potential applications:

- Leak detection of helium in the space shuttle and future crew exploration vehicles (CEV)
- Chemical analysis tool for a variety of inert gases in planetary exploration
- Carbon dioxide detection for global weather monitoring
- Defense industry
- Environment industry

PUBLICATIONS

Patent No: 7,426,848

technology.nasa.gov

NASA's Technology Transfer Program pursues the widest possible applications of agency technology to benefit US citizens. Through partnerships and licensing agreements with industry, the program ensures that NASA's investments in pioneering research find secondary uses that benefit the economy, create jobs, and improve quality of life.

ARC-15460-1, TOP2-111

More Information

National Aeronautics and Space Administration

Agency Licensing Concierge

Ames Research Center

MS 202A-3
Moffett Field, CA 94035
202-358-7432
Agency-Patent-Licensing@mail.nasa.gov

www.nasa.gov

NP-2015-02-1371-HQ