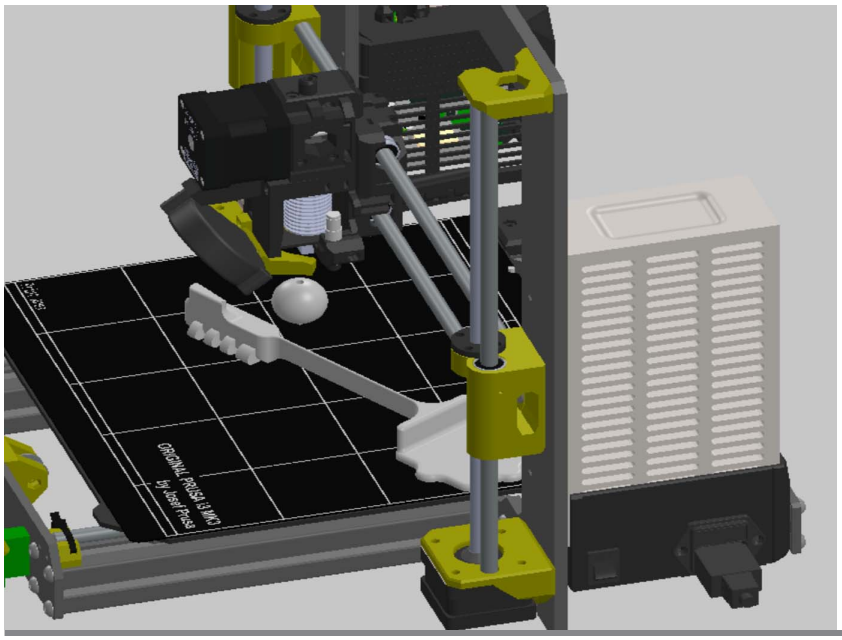

National Aeronautics and Space Administration

TECHNOLOGY SOLUTION

Manufacturing

Fully Automated High-Throughput Additive Manufacturing

Embedding Smart Code to Automate and Augment 3D Printing Processes

The Additive Manufacturing (AM) process uses a 3D printer to convert a filament into a three-dimensional manufactured object by melting the filament and depositing it in built-up layers to form the desired object, where the movement of the printing head is controlled by computer code. The automation of AM is limited and usually still requires human labor workflows, including the fundamental step of removing the finished object from the printer platform. NASA Ames Research Center has developed a novel method to increase automation of AM by embedding additional instructions into the manufacturing toolpath to create manufacturing tools in situ, such as linear springs on the printer platform, and to instruct movement of the printer's parts to autonomously move the finished object off the platform. The technology eliminates the need for humans in the loop for high-throughput applications. Testing can also be integrated into the manufacturing toolpath.

BENEFITS

- Ability to 3D-print objects, and autonomously move the finished object off the 3D printer platform
- Economic - the increased throughput through the automation of clearing a machine without the need for additional robotic manipulators
- Ability to automatically test 3D-printed objects without human intervention
- Automated testing for quality control, machine calibration, material origin, counterfeit detection
- Portable - ease of implementation on many widely used Fused Filament Fabrication (FFF) platforms with minimal tailoring
- Allow for the automated embedding and physical validation of additional dimensions of information through the manufacturing process

THE TECHNOLOGY

The technology is a method to increase automation of Additive Manufacturing (AM) through augmentation of the Fused Filament Fabrication (FFF) process. It can significantly increase the speed of 3D printing by automating the removal of printed components from the build platform without the need for additional hardware, which increases printing throughput. The method can also be leveraged to perform automated object testing and characterization. The method includes embedding into the manufacturing instructions methods to fabricate directly onto the build platform an actuator tool, such as a linear spring. The deposition head can be leveraged as a robotic manipulator of the actuator tool to bend, cock, and release the linear spring to strike the target manufactured object and move it off the build platform of the machine they were manufactured on. The ability for an object to 'fly off of the machine that made it' essentially enables automated clearing of the processed build volume. The technology can also be used for testing the AM machine or the feedstock material by successively fabricating prototypes of the manufactured object, and taking measurements from sensors as the actuator strikes the prototype. This provides automated testing for quality control, machine calibration, material origins, and counterfeit detection.

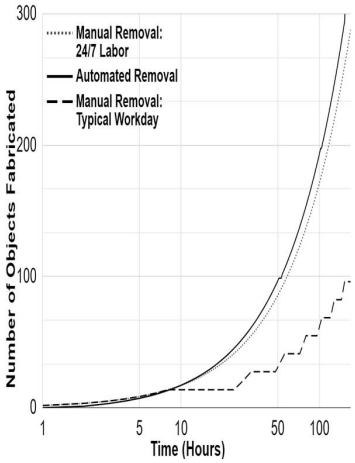

AM Throughput Comparison

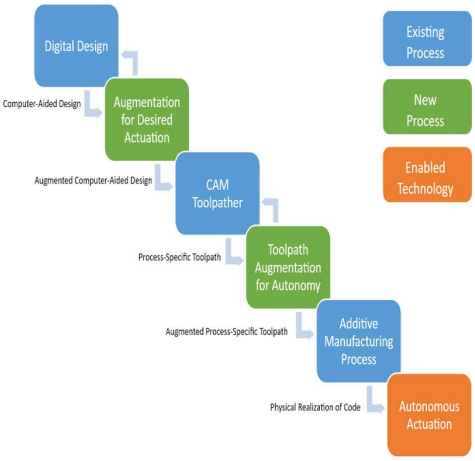

System Process Flow

APPLICATIONS

The technology has several potential applications:

- Automated Additive Manufacturing object testing and material testing and rapid prototyping
- 3D printer end-users requiring precise physical characteristics of printed components (e.g., automotive, urban air mobility industries)
- 3D printing service providers
- 3D printing platform manufacturers
- Computer-aided manufacturing (CAM) systems
- In-Space Manufacturing and Testing

PUBLICATIONS

Patent Pending

https://ieeexplore.ieee.org/abstract/document/9158926

More Information

National Aeronautics and Space Administration

Agency Licensing Concierge

Ames Research Center

MS 202A-3
Moffett Field, CA 94035
202-358-7432
Agency-Patent-Licensing@mail.nasa.gov

www.nasa.gov

NP-2015-05-1882-HQ

technology.nasa.gov

NASA's Technology Transfer Program pursues the widest possible applications of agency technology to benefit US citizens. Through partnerships and licensing agreements with industry, the program ensures that NASA's investments in pioneering research find secondary uses that benefit the economy, create jobs, and improve quality of life.

ARC-18452-1, ARC-18748-1, TOP2-301